REV	DESCRIPTION	DRAWN	DATE
		APPROVED	DATE

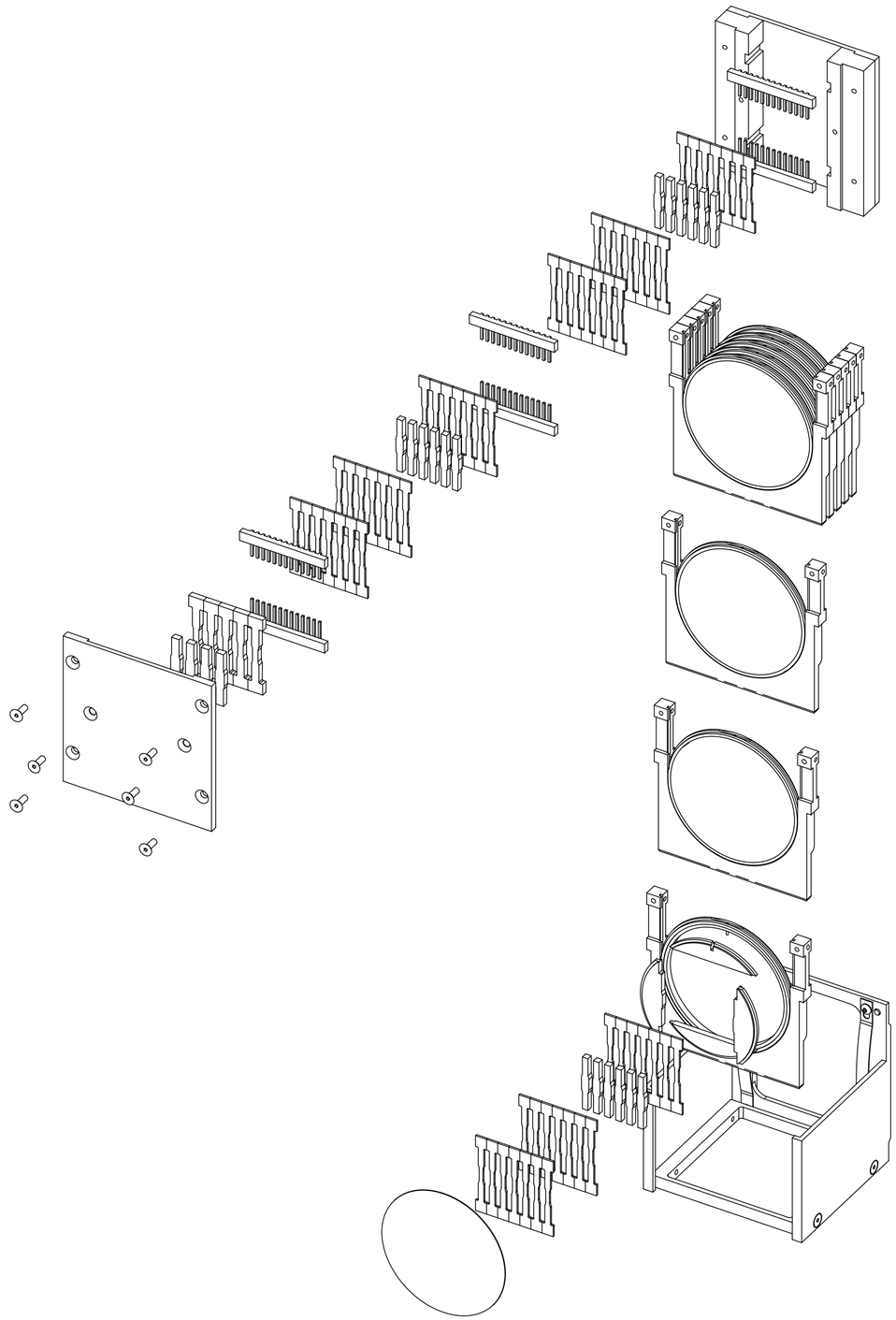

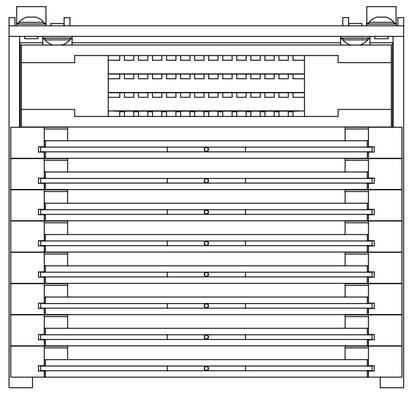

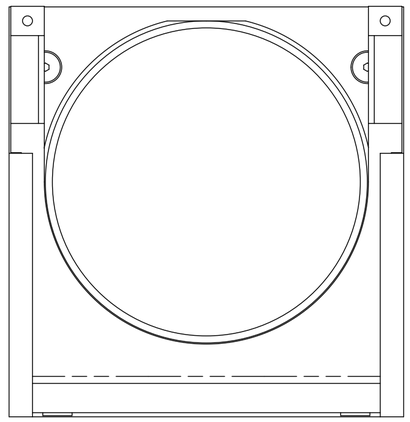

UNLESS OTHERWISE SPECIFIED			ORIGINATOR	J.MISEK	21-DEC-2009
			DRAWN	D.HURD	18-FEB-2010
±	±	±	CHECKED		
1. BREAK ALL SHARP EDGES MAX.			APPROVED		
2. DO NOT SCALE DRAWING. 3. DIMENSIONS BASED UPON			USED ON		
4. MAX. ALL MACH. SURFACES √			MATERIAL SEE PARTS LIST		
5. DRAWING UNITS:					

FERMI NATIONAL ACCELERATOR LABORATORY
UNITED STATES DEPARTMENT OF ENERGY

LBNE
TARGET STUDIES
SAMPLE BOX ASSEMBLY

SCALE	DRAWING NUMBER	SHEET	REV
1/2	5520.000-MC-	1 OF 1	

CREATED WITH : Ideas12NXSeries | GROUP: ACCELERATOR MECH. SUPPT.

Created: 08:43:14 on 19-02-10 (D-M-Y) By: hurd State: 1-INITIAL