LBNE LANNDD-20kT

Design guidelines

Cryostat structure

Cryostat performances

Distributed LN_2 cooling

Distributed Ar purification

Inner detector

Signal and HV feedthroughs

Underground cavern and safety issues

Preliminary R&D and prototyping

Design guidelines

LAr TPC technique based on the experience from ICARUS.

Not very much to improve. Consider to adopt:

- Cold electronics (only if ultra reliable at 10-year level and if low-heat dissipating)
- Long drift (depending on the results on the LANNDD-5mD tests. High LAr purity required)
- Wire chambers with 2 wire planes with orthogonal wire alignment (uncorrelated coordinates)

Vacuum insulated cryostat for a safe, economical and quite operation during tenths of years.

Vacuum insulation allows filling by LAr after air evacuation to reach the best argon purity in short time (crucial point!).

LBNE LANNDD-20kT

Cryostat structure

Parallelepiped shape ~W=20m × H=20m × L=40m

Double wall cryostat with vacuum between the inner and outer vessels

Inner vessel reinforced by a cubic lattice structure (L×L×L, L=5m) of stainless steel pipes

Outer vessel linked to the inner one trough thermal bridges (transversally sliding and longitudinally elastic to follow the inner vessel shrinkage)

Inner vessel lattice filled by LN_2 - distributed heat exchanger

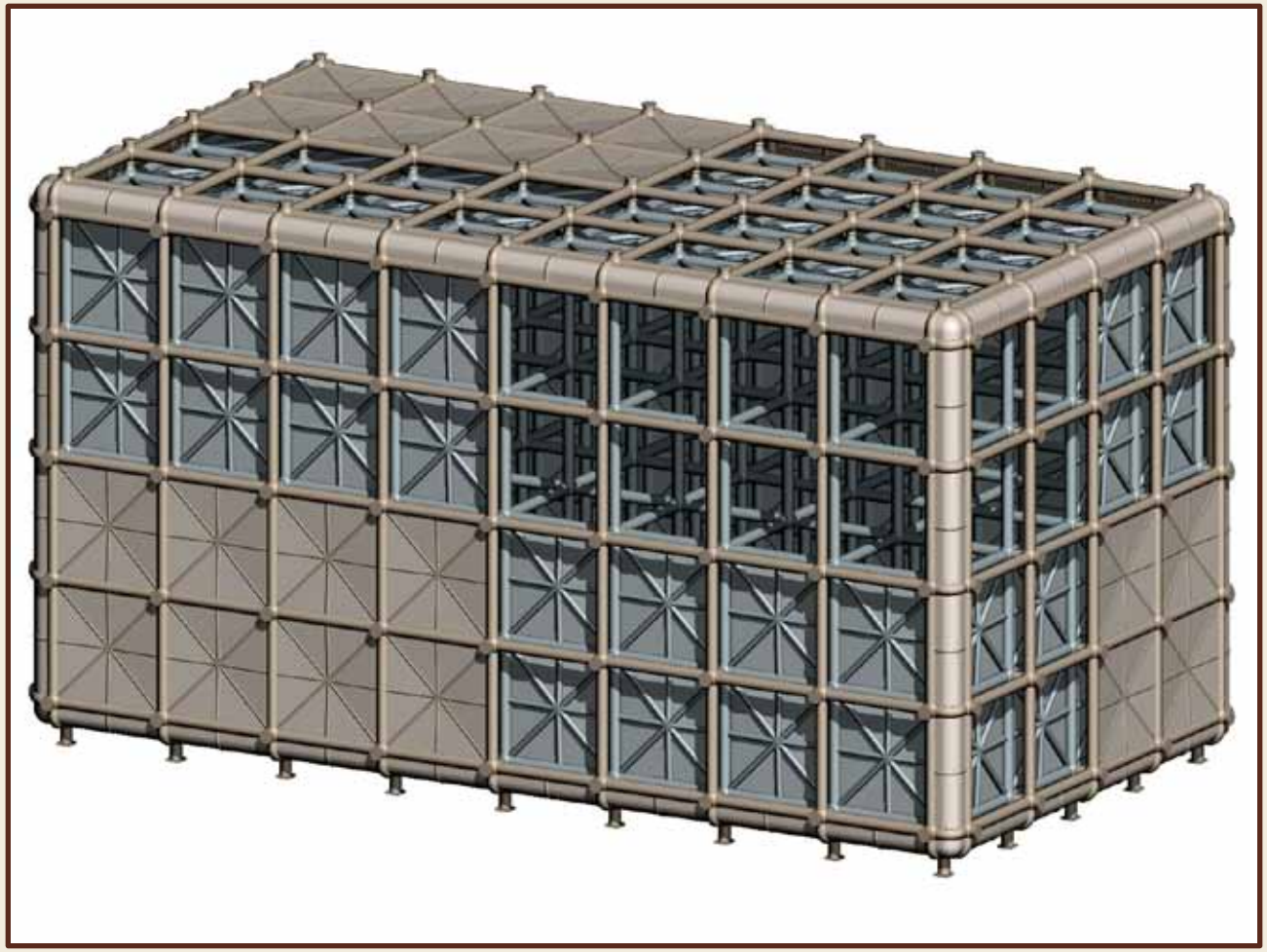

LBNE LANNDD-20kT

Cryostat size

Excluding the inner beam structure:

Liquid Argon volume15’485 m^3 ≅ 21.7 kT

Gas Argon volume 239 m^3 ≅ 1.5 %

Linearly active LAr volume 13□095 m^3 ≅ 18.3 kT

Active LAr volume13□853 m^3 ≅ 19.4 kT

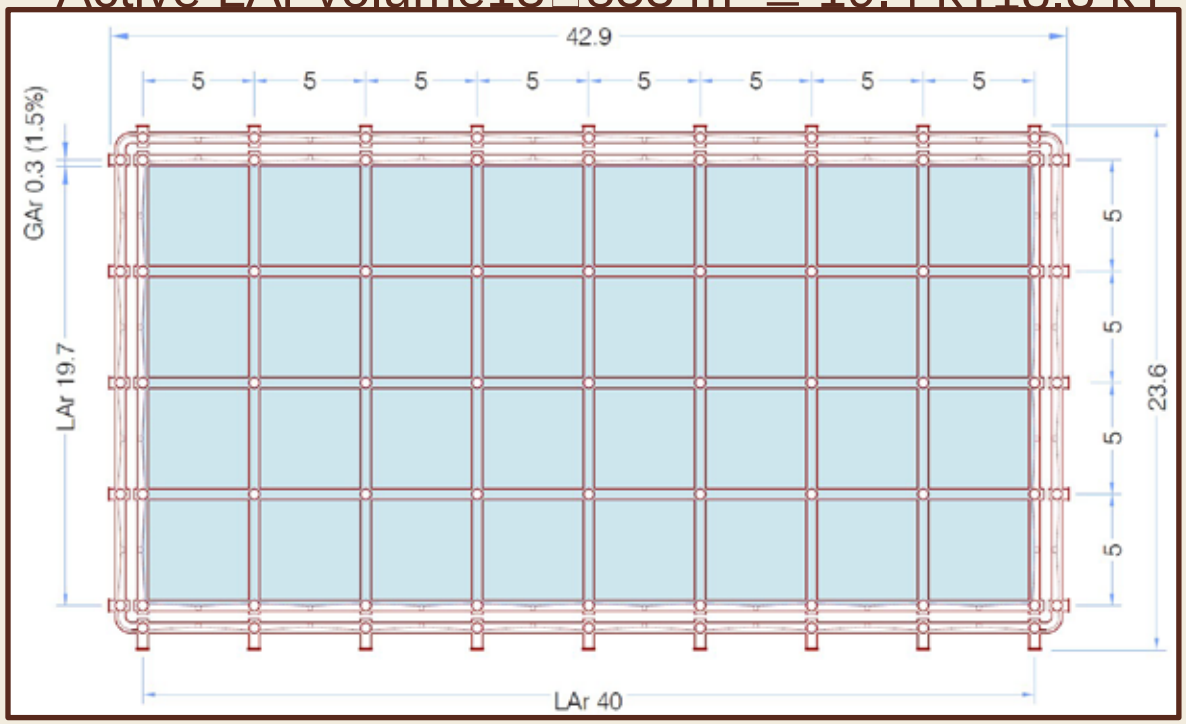

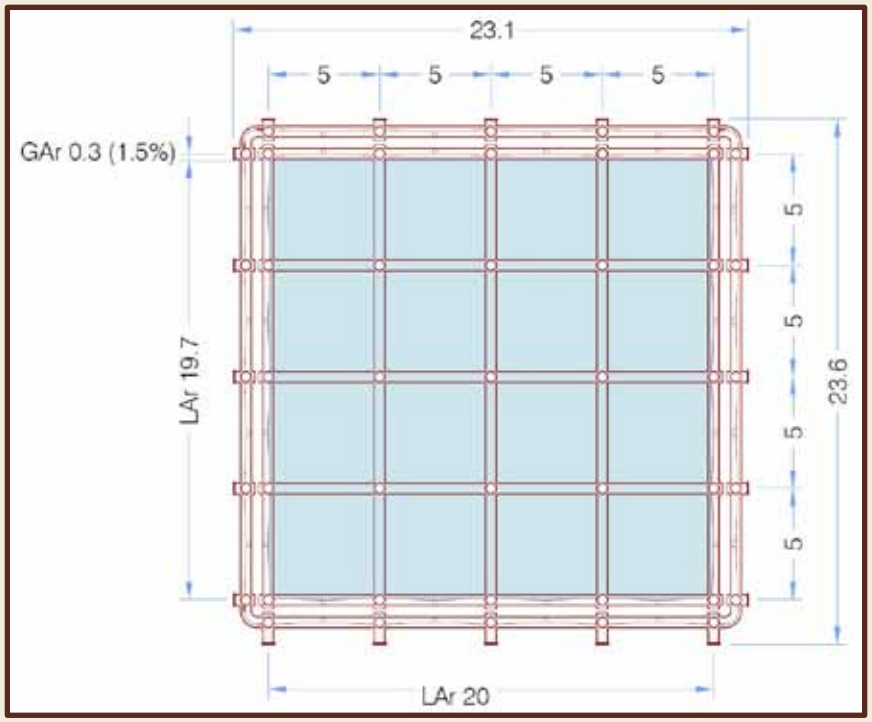

LBNE LANNDD-20kT

Cryostat performances

Total inner vessel exposed surface ≈ 4’000 m^2

Heat input by radiation at ≲ 0.6 watt/m^2 (with 30 superinsulation layers) = 2’400 watt

Heat input by residual conduction through the 230 thermal bridges ≈ 230 x 1.9 watt ≈ 440 watt

Total heat input ≈ **4.24** Kwatt corresponding to a LAr evaporation rate of **1.1** m^3/day

or to a LN_2 evaporation rate of **1.8** m^3/day

or to an electric power of **633** kWh/day (**63**

Operation costs not far from WC

228 k$ in 10 years

Heat input with passive insulation, from ICARUS: calculated 5 W/m^2 - measured **15 – 20** W/m^2

Total heat input ≈ **60 – 80** Kwatt ➡ LAr evaporation rate **23 – 30** m^3/day

LN_2 evaporation rate **37 – 49** m^3/day

electric power **13 – 17** MWh/day (**1.3 – 1.7** k$/d)

4.7 – 6.2 M$ in 10 years

with **17** STIRLING SPC-4 cryocoolers

Thermal bridges

Sandwich made by dishes of Woven Glass Fabric with epoxy resin interleaved by thin SS plates for an uniform stress distribution

Compression breaking strain perpendicular to strata: >400 N/mm^2 ⟶ a Ø20cm round can hold 1000 ton

Thermal conductibility between 300K and 87K λ= 0.615 W/cm

Average heat input for each thermal bridge 1.9W

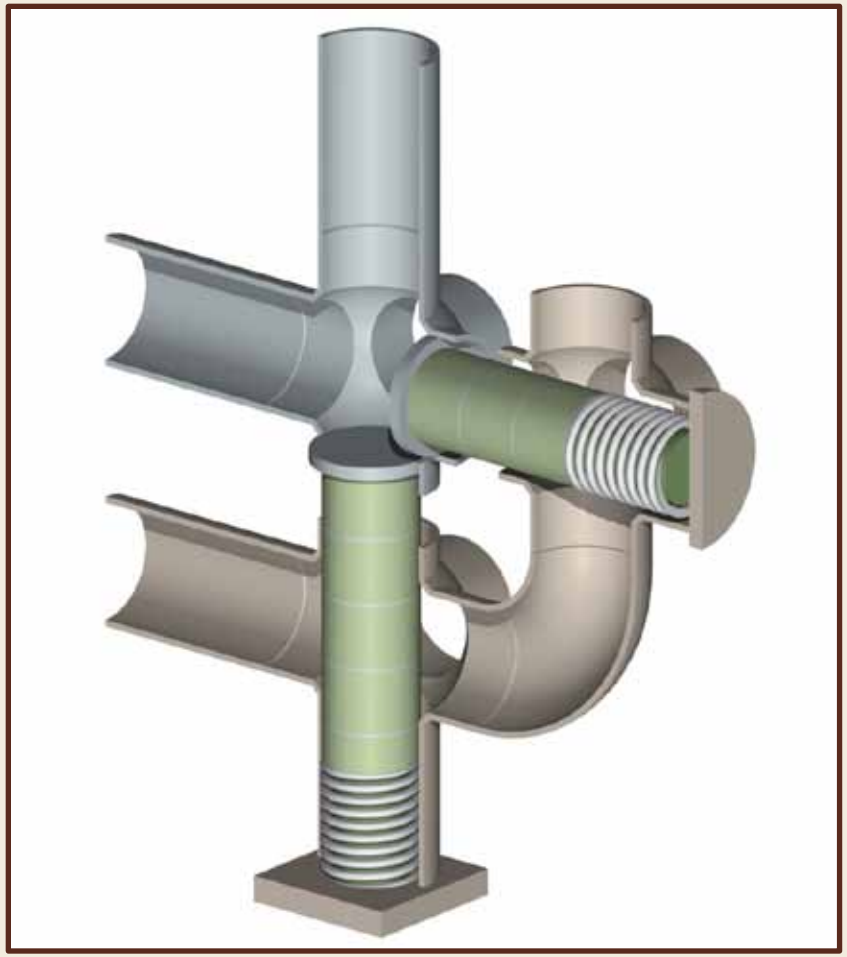

Vertical and Horizontal Thermal Bridges

LBNE LANNDD-20kT

Distributed Cooling

LN_2 circuitry

Inner lattice structure filled by LN_2 for a total volume of 360 m^3.

LN_2 pressurized at ~2.5 bar (86K)

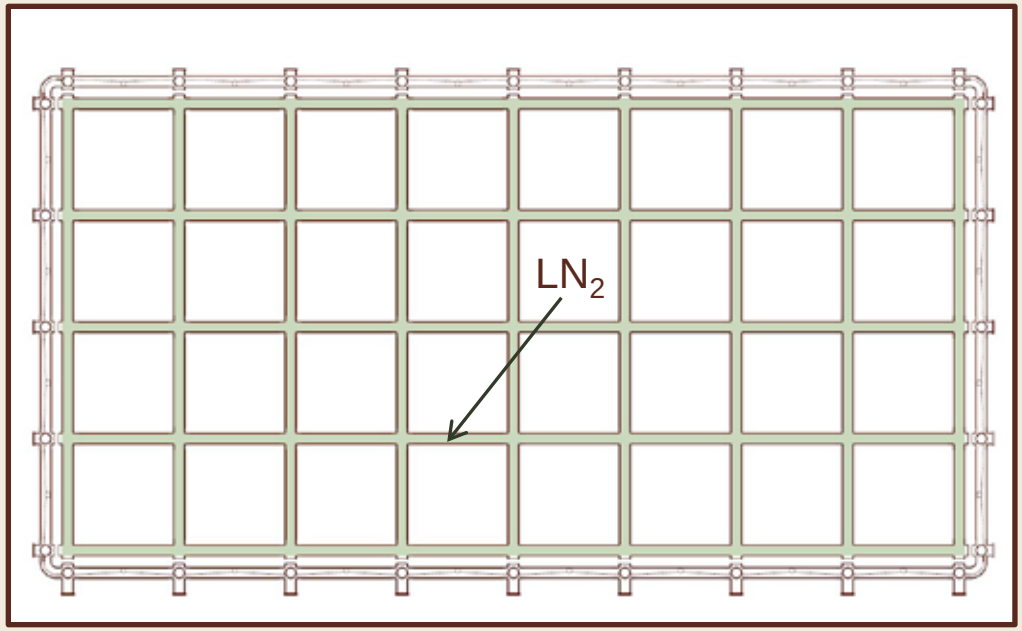

Required on the detector top:

- N_2 expansion vessel
- LN_2 storage vessel
- One cryogenerator for recondensing the evaporated LN_2

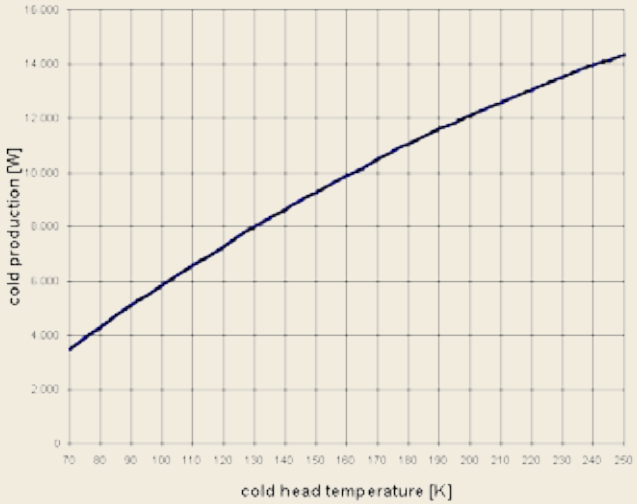

Stirling® SPC-4

Distributed LAr Purification

Purification in liquid phase.

Design as for LANNDD-5mD and for MEG (LXe)

With 8 cryo-pumps 4:1, 3.2 l/s ⟶ Full volume passed through O_2 getter in one week

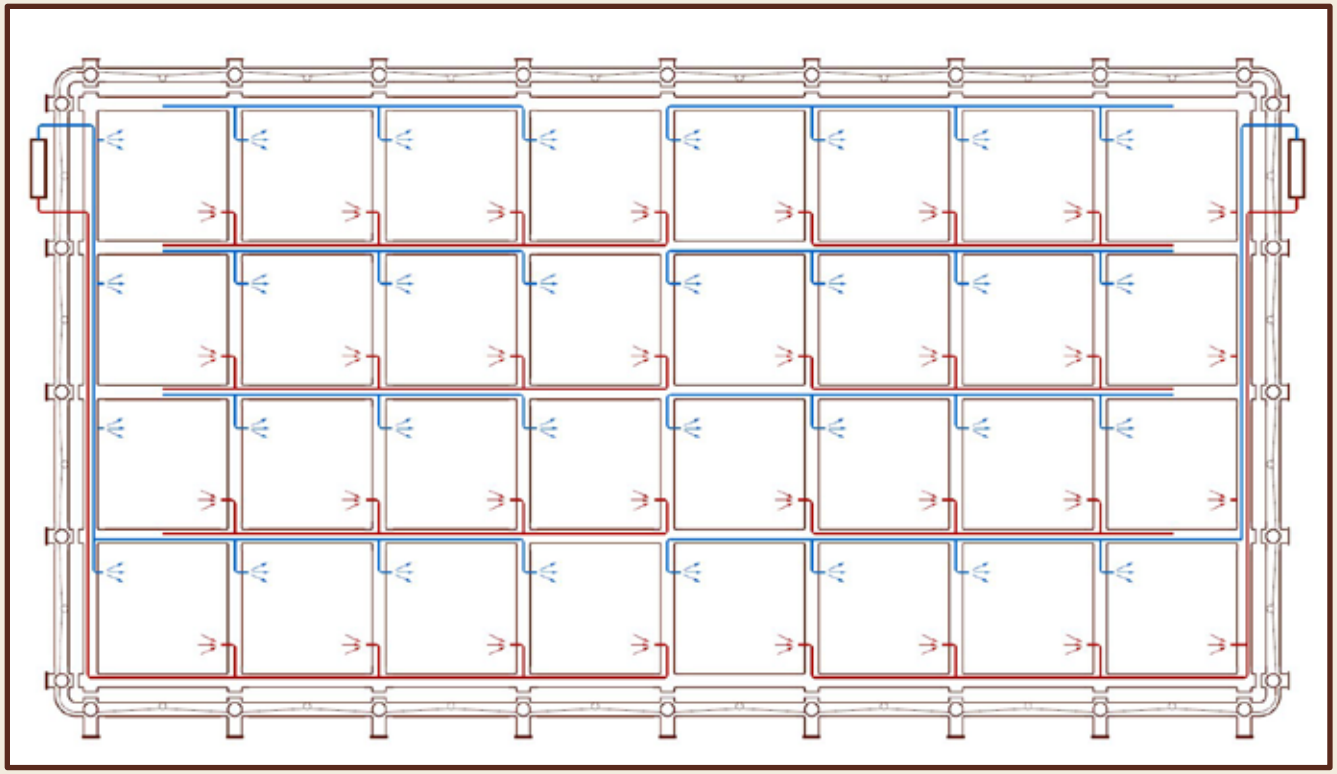

MEG Experiment- ETH Zurich
LXe purification system in liquid phase

LBNE LANNDD-20kT

Inner detector

Horizontal wire chamber planes (to cope with possible different behavior of drift velocity and ionization with depth in LAr)

Wire chambers with wires at 0° and 90°. Uncorrelated coordinate system.

Detector and underground cavern preferably oriented at ±45° respect to the □-beam direction

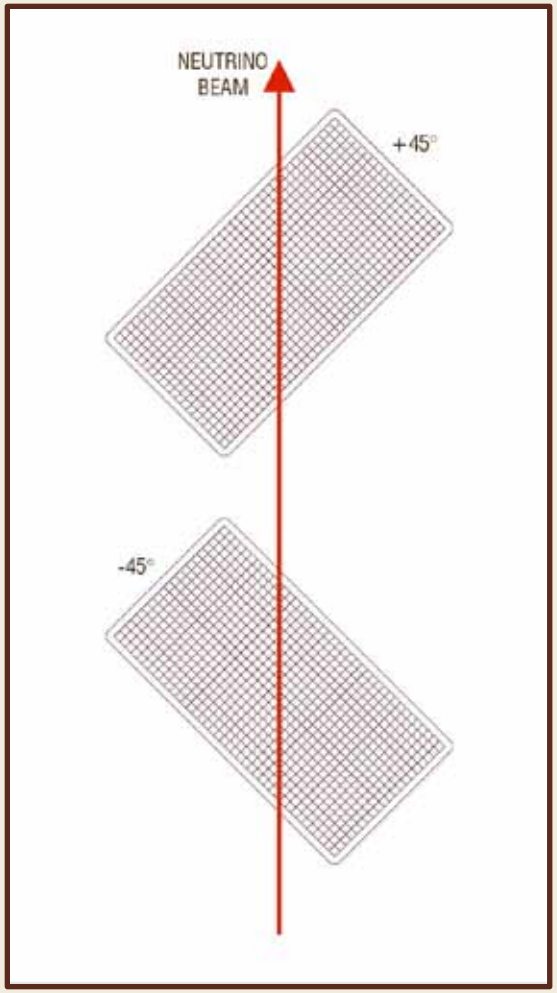

Preferred detector and cavern alignment

LBNE LANNDD-20kT

Wire chambers

Wire chambers with wires at 0° and 90°.

All equal length (~19.4m) wires.

Maximized S/N.

Easy installation and tensioning (0° wires hanged on left/right sides, 90° wires hanged on front/middle/back sides)

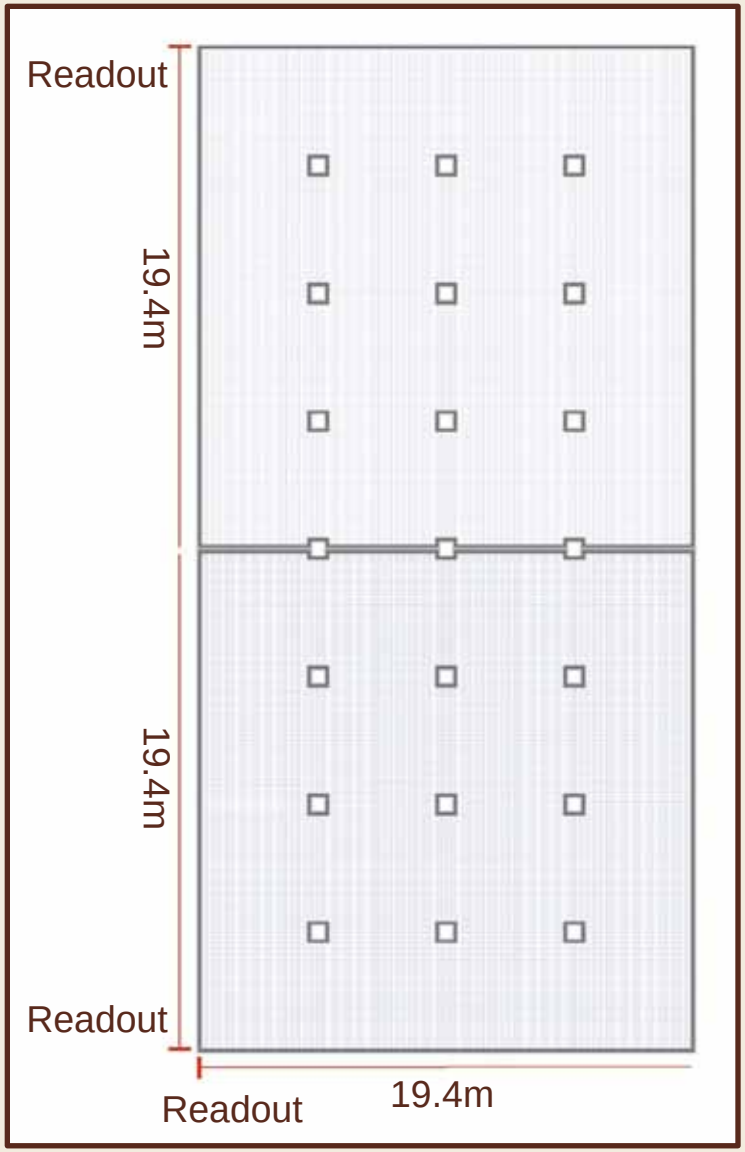

LBNE LANNDD-20kT

Inner detector

4 double side wire chambers

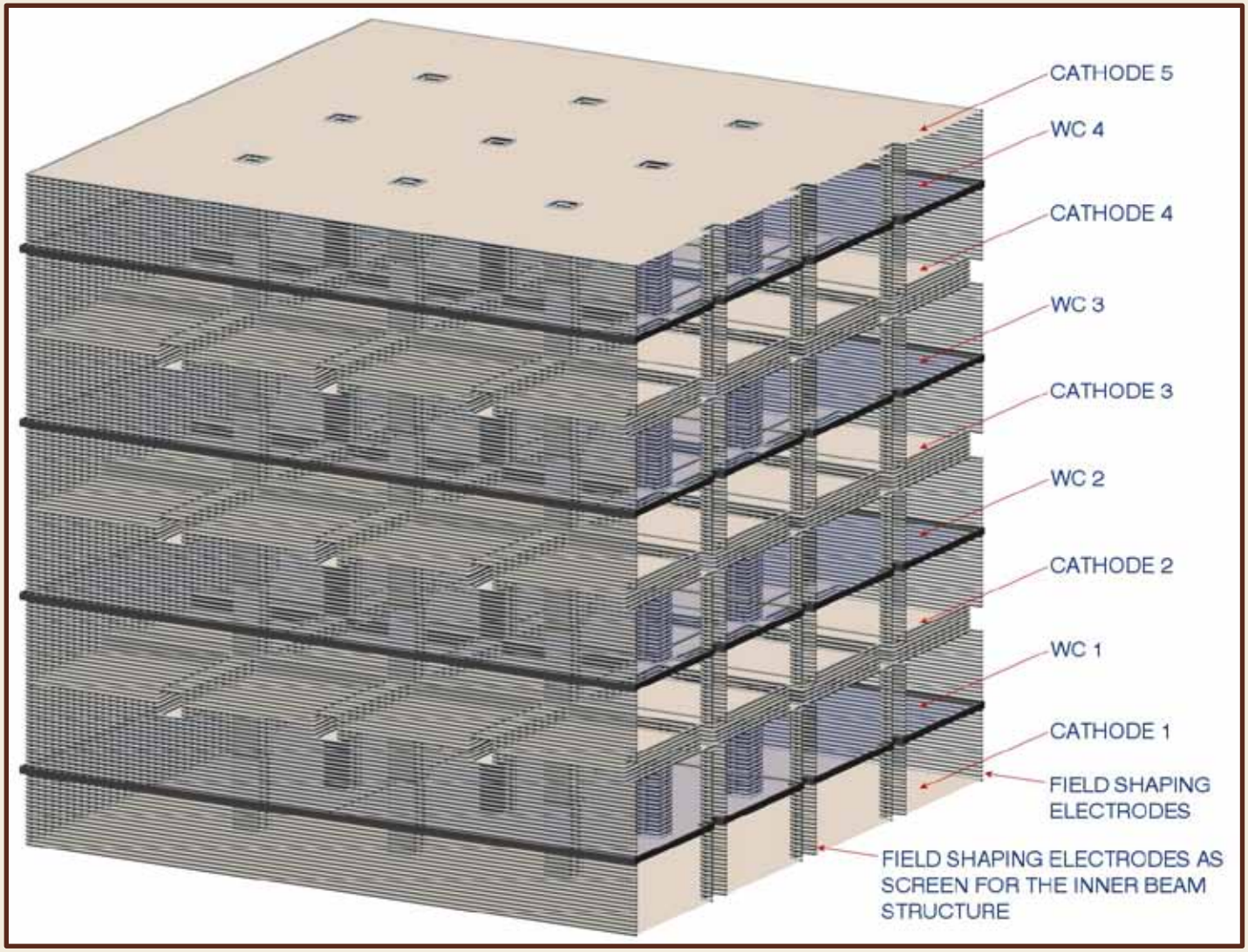

Inner detector (half in length)

LBNE LANNDD-20kT

Inner detector

4 Wire Chambers (each with 4 wire planes)

5 Cathode Planes

Field Shaping Electrodes with linear voltage degrader

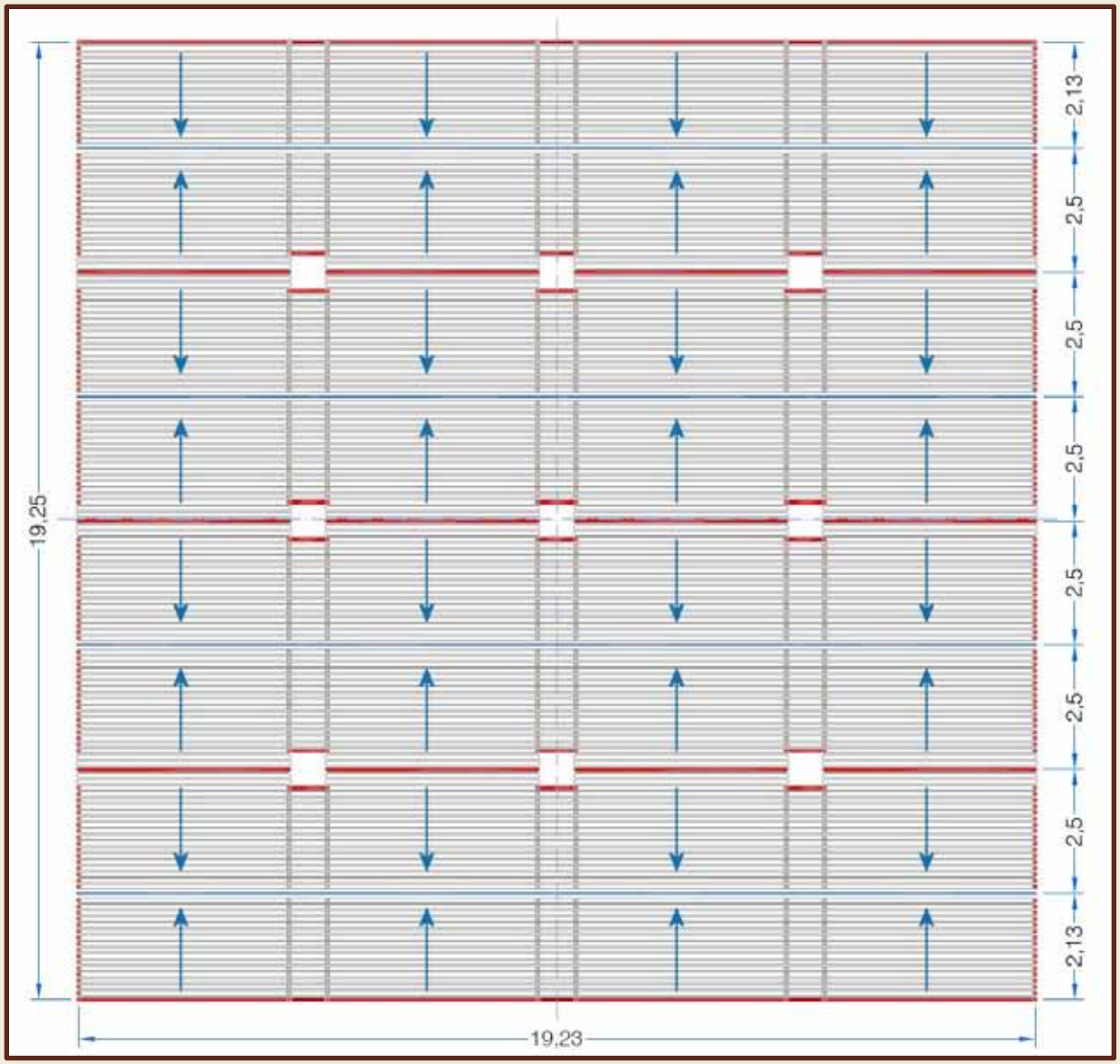

Inner detector vertical cross section

Wire Chamber Assembling

Welded supports on each beam

PCB holder with screws for wire tensioning

Plate bolted to the supports

Set of 128 wires, supplied in rolls, hanged on one side and spread to the opposite side

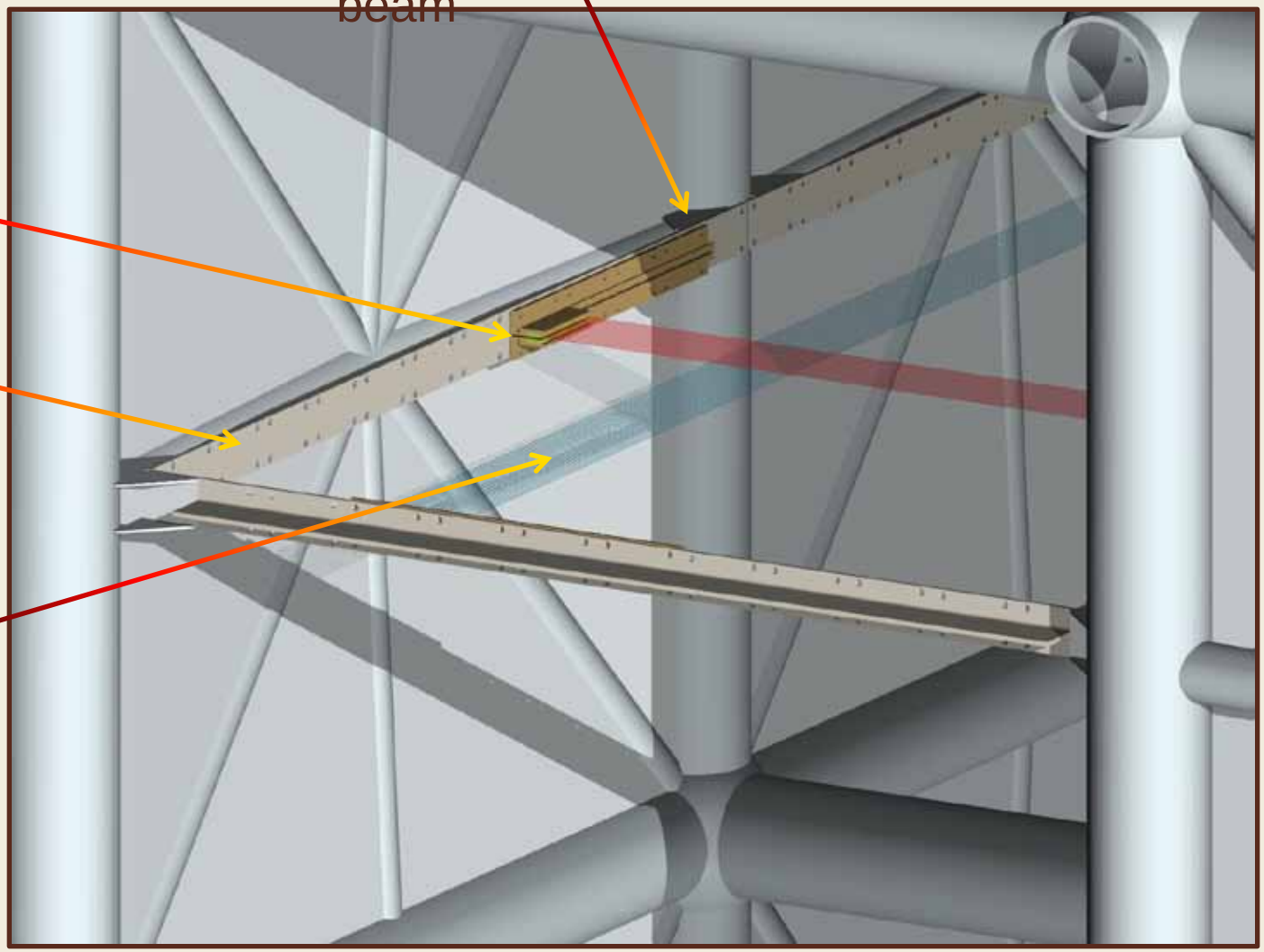

Wire Chambers

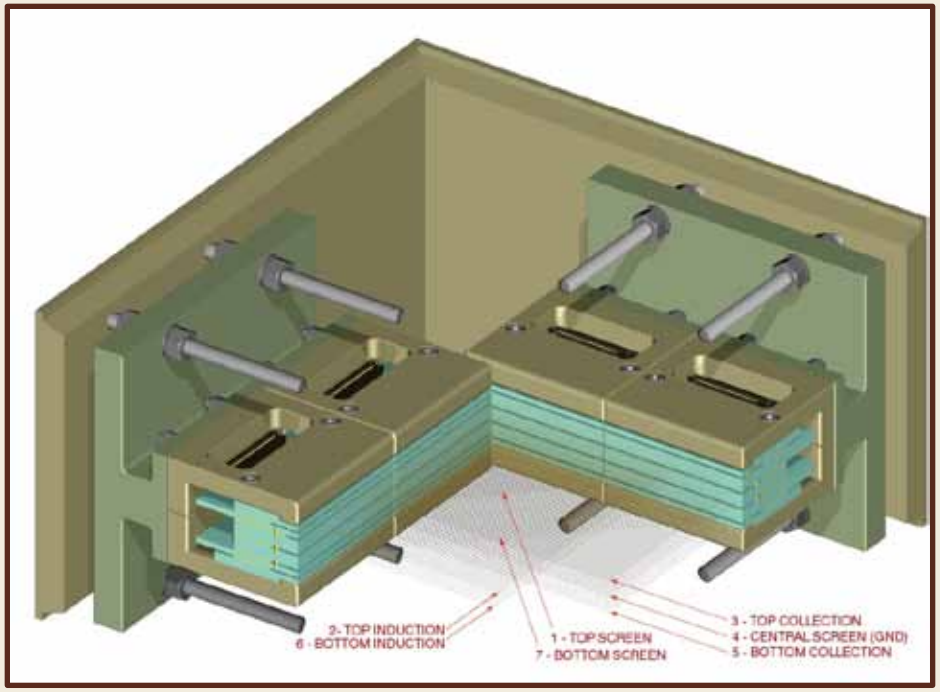

Wire plane and wire hanging

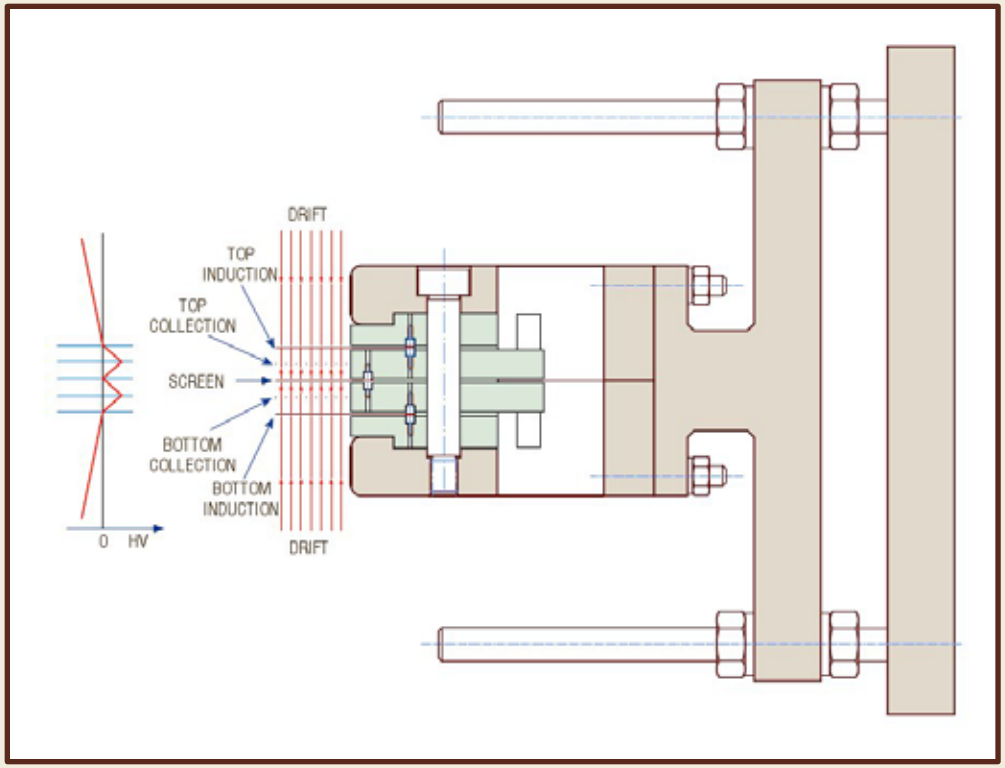

LBNE LANNDD-20kT

Inner detector

Wires: Ø100μm, L= 19.4m

Wire spacing: 3mm

Wires /plane = 51’000

Number of wire planes = 8

Total number of wires = 408’256

Wire plane spacing: 4mm (5mm)

Wire capacitance = 401 pF

N(400pF) = $2 \cdot 10^3$ e^- ≅ 1/8 mip ⟶ CAN BE IMPROVED

S/N(0m drift) = 8

S/N(2.5m drift) = 5 (attenuation of 0.6 with purity 0.1ppb) ⟶ PURITY and ELECTRONIC NOISE ARE THE ESSENTIAL PARAMETERS

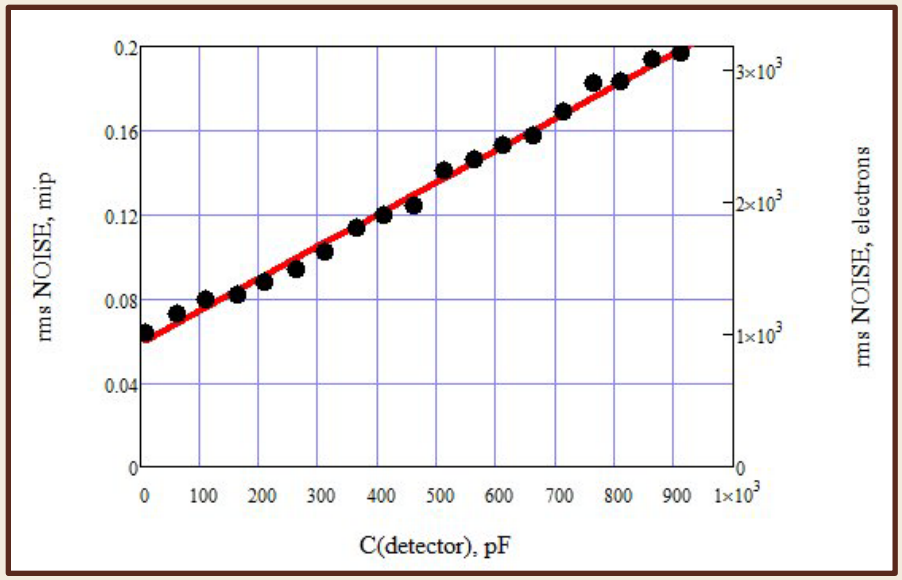

Noise measurement on modified ICARUS amplifier

Safety Issues

By contacts with 3 different companies and with cryogenic engineers, it results that:

- The design can be made in a relatively short time by engineer companies specialized in large framework constructions (with dedicated software including safety).
- Cryostat construction following Full Proved Codified Technologies (as for nuclear reactors) can have the highest level of safety.
- The cryostat is fully made by stainless steel. After controls, tests, certifications on materials and welding we can expect long term operation without problems. In case of LAr-to-vacuum or air-to-vacuum leaks, alarms can be triggered for evacuating the detector.

The problem of a LAr Emergency Storage or Multiple movable dewars for empting the detector must be faced for any solution (vacuum or passive insulation).

LBNE LANNDD-20kT

Underground Cavern

Top fresh air inlet, bottom Ar exhaust

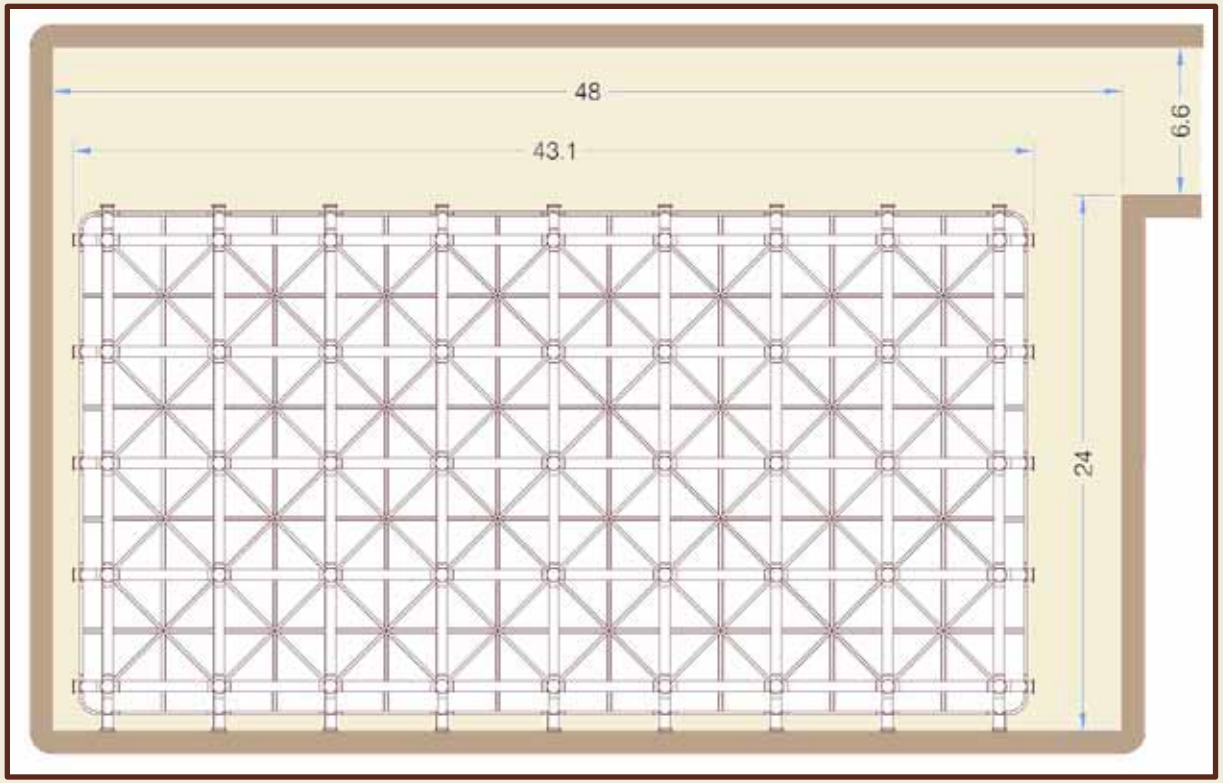

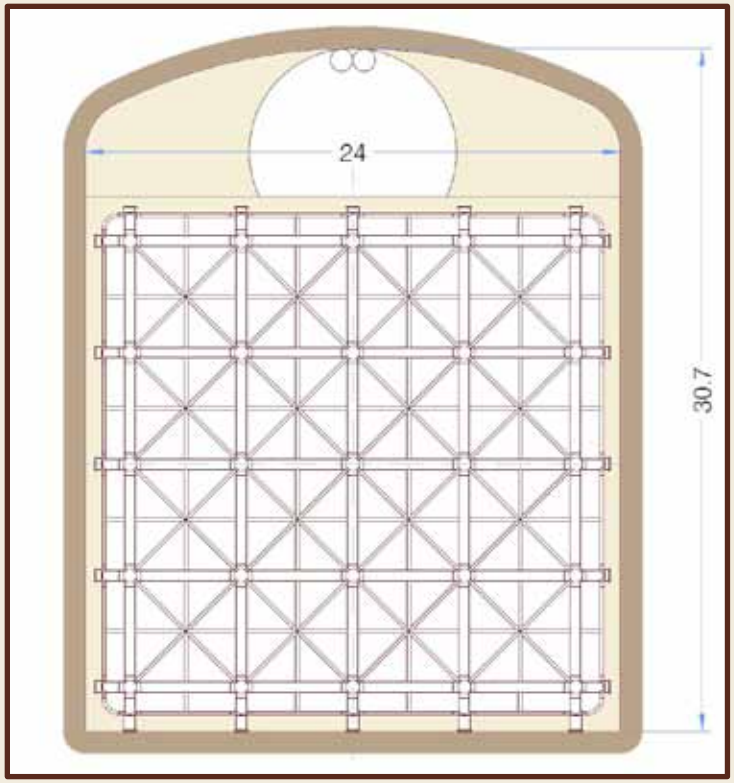

LBNE LANNDD-20kT

Preliminary R&D and Prototyping

L x L wall

Reduced scale model

Feedthroughs

LAr purification units

Thermal bridges

Contacted Companies

CINEL Strumenti Scientifici s.r.l.
Via dell'Artigianato, 14-14/A
35010 Vigonza (Padova) - Italy
Phone ++39 049 725022
Fax ++39 049 8931881
E-mail: info@cinel.com
Web: http://www.cinel.com/

GIEMINOX srl
Via Lago di Vico, 22 - Z. I.
36015 Schio (VI) Italy
Phone: +39 0445 575959
Fax: +39 0445 575305
E-mail: info@gieminox.com
Web: http://www.gieminox.com/

ECOR RESEARCH SpA
Via Friuli, 11 Z.I.
36015 - SCHIO (Vicenza) Italy
Phone: +39 0445 576063
Fax: +39 0445 576264
E-Mail: info@ecor-research.com
Web: http://www.ecor-research.com/

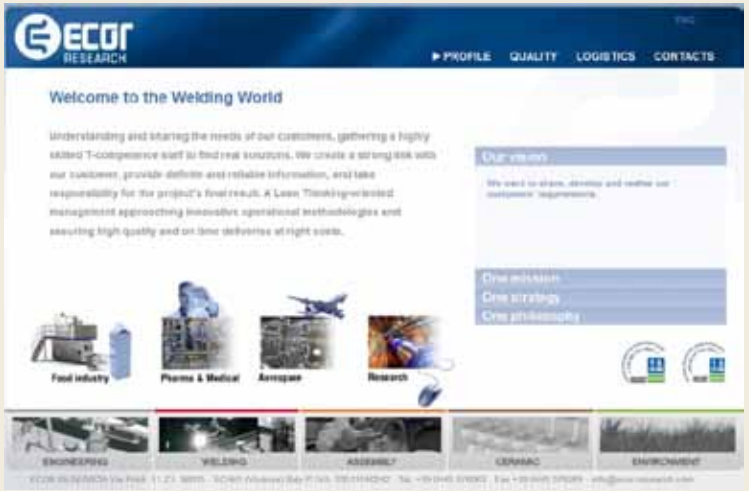

The company CINEL (reference) with associated GIEMINOX / ECOR RESEARCH propose themselves as possible producers of the cryostat and of the inner detector, by building sub-complexes in Italy and by finally assembling underground.