DC Current Leads for LBNE

Hans Jostlein 5/23/2010

Abstract

The cold electronics require a total current of 10,000 A at low voltage. We look into the option of using external DC power supplies and current leads. The resulting lead sizes, voltage drops, and heat loads are acceptable.

Introduction

Large DC currents, about 60 A, need to be provided at low voltage to each APA panel. The DC conductors must bring in also the ground reference, another 60 A. It has been proposed to use cold DC-to-DC converters on the APA's . We are looking here at the "brute force" alternative of using external DC supplies and copper feed-throughs with argon gas cooling.

Issues of feed-throughs versus cold DC-DC conversion

While cold DC-DC conversion appears attractive and "natural" at first to meet the high current –low voltage requirements, there are a few potential issues with that solution:
--loss of an APA panel if the converter fails
--noise produced and radiated by the converter
--additional heat load from converter inefficiency

We are looking here at the properties of a system using external DC supplies.
Potential issues include:
--conductive heat input via the feed-throughs
--warm ends elements of the feed-throughs due to heat conduction
--massive copper requirements
--Voltage drops/ voltage regulation issues
--bubble generation in the LAr

Proposed System Description

To be specific we assume the following architecture:
--each APA receives its DC current through its own copper feedt-hrough, mounted within or next to its signal feedthrough
--The DC power is brought in on line pairs, one for voltage and one for reference
--the line pair is routed together and twisted to inhibit noise radiation
--the DC power is routed next to the copper signal bundle
--The DC supply is located outside, next to the feed-through, and isolated from ground
--the feed-through receives an argon gas purge to keep its cold end close to 90 K

With those assumptions we assume 60 A per APA on both the supply and reference line.
We assume a feed-through length (cold to warm end) of 2 m, and a typical internal distribution length of 15 m for the top APA's , and 30 m for the bottom APA's. We further assume a copper cross section of 2.4 cm^2 for each lead.

We use, conservatively, the room temperature resistivity for copper. The cold cable runs can have substantially lower resistance if high purity, large RRR, copper is used.

Feedthroughs

We are estimating the conductive heat input, the power generation, and the required Ar gas flow, in each feed through. See also the attached Excel sheet for details.
The voltage drop is 17 mV per lead or 34 mV total.
The conductive heat input per pair for each APA is 2.05 W, the electrical loss is 0.11 W, for a total of 2.16 W. The argon gas purge requires 0.01 L/s or 0.6 l/min.

Internal Current routing

The average distance is 25 m, creating a voltage drop of 211 mV per line, or 422 mV total (assuming RT resistivity as mentioned above). This is a significant fraction of the useful voltage. It will be, however, an extremely stable number. On-board ADC's can report the voltage at the board back to allow accurate setting of the voltage (the ADC's would be powered directly from the ouside). The internal routing power loss is 25 W (total for both lines).

Totals for the Detector

For the 168 APA' we get
Total heat conduction through DC current feed throughs 1900W
Total gas purge 10.21 l/s
Total electric loss in FT's 344 W
Total power loss for all APA's 4214 W
Note that the purge gas is a small fraction (6 %) of the boil-off rate from insulation heat gain.

Conclusions

Using external DC power supplies and copper feed-throughs appears to be a reasonable choice, probably preferable to the use of cold DC-DC converters. The copper dimensions and heat loads are acceptable.

Panels on a “Glass-Truck” (courtesy Bo Yu)

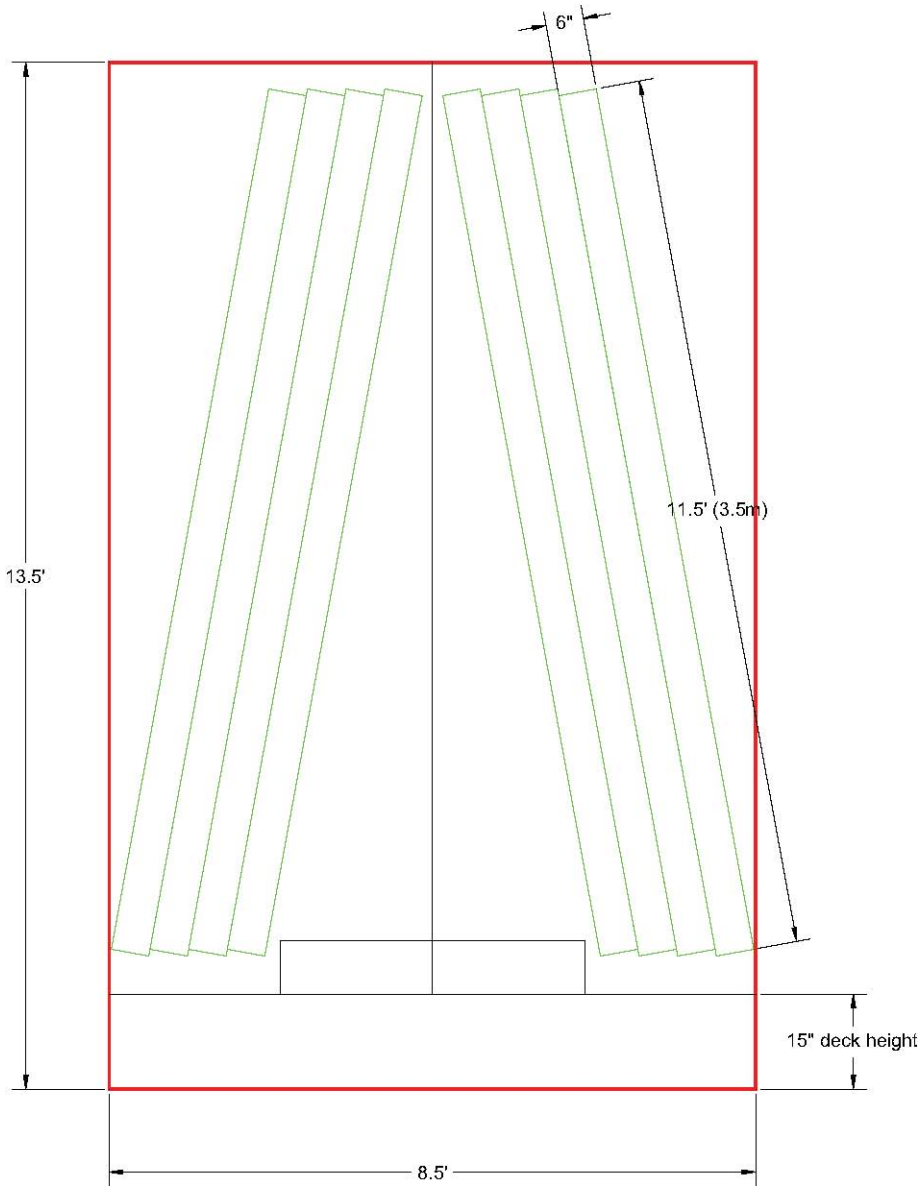

Note: Panels are shown in dark; Cribbing is shown in lighter color;
All dimensions are in meters

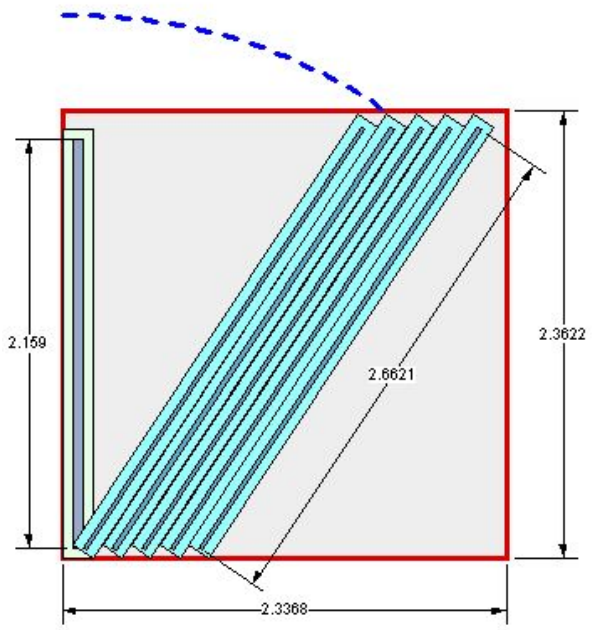

Standard Container Cross-Section

(Interior Dimensions)

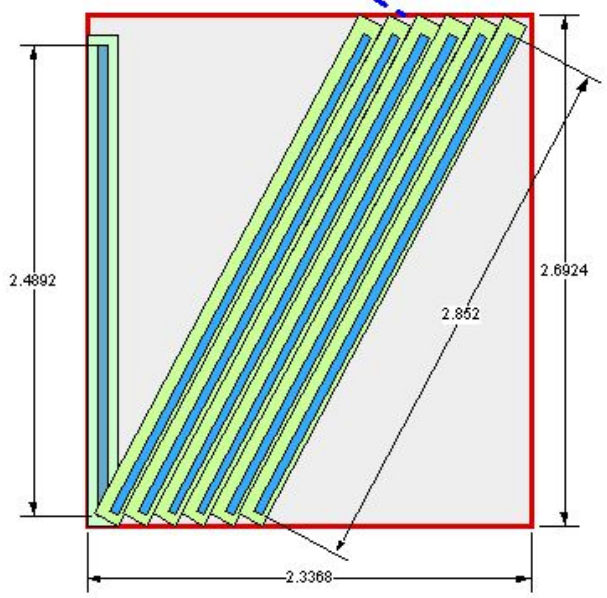

Hi-Cube Container Cross-Section

(Interior Dimensions)

Hans Jostlein
4-16-2010

All following container dimensions, and maximum weights are AVERAGES. Containers are smaller than truck trailers. In Canada, road maximum weights are 44,000Lbs cargo weight on 2 trailer axels (60,000Lbs on 3-axels) - beyond which, special permits and more axels are required. The container line shown is not necessarily who we will be negotiating with to sail on, and the line that is chosen may not have all of this equipment, and it may differ in sizes and maximum weights shown. Rail companies in Canada have reduced the maximum weights allowable (including the TARE weight of the container) to 50,000Lbs on a 20 foot container (with the ability to increase only up to 55,000Lbs when an additional US$350 is paid to the rail), and 60,000Lbs on a 40 foot contaienr (with the ability to increase only up to 65,000Lbs when an additional US$200 is paid to the rail). Please advise us what you expect to load in what equipment so we can properly quote the lines that can handle it.

20 foot STANDARD container: Average Interior dimensions: 19'4"L x 7'8"W x 7'9"H Average Maximum Payload Weight: 52,910Lbs If a High Stress is available, Average Max. Payload: 67,000Lbs	Dims in inches: 232"L x 92"W x 93"H Door Size: 92"W x 90"H Tare Weight: 4960Lbs	
20 foot OPEN TOP container: Average Interior dimensions: 19'4"L x 7'8"W x 7'9"H Average Maximum Payload Weight: 48,000Lbs If a High Stress is available, Average Max. Payload: 62,000Lbs	Dims in inches: 232"L x 92"W x 93"H Door Size: 92"W x 90"H Roof Opening: 211" x 86" Tare Weight: 4960Lbs	
20 foot HARD TOP container: Average Interior dimensions: 19'3"L x 7'8"W x 7'7"H Average Maximum Payload Weight: 47,000Lbs If a High Stress is available, Average Max. Payload: 60,500Lbs	Dims in inches: 231"L x 92"W x 91"H Door Size: 86"W x 89"H Roof Opening: 200"L x 86"W Tare Weight: 5950Lbs	
20 foot REEFER container: Average Interior dimensions: 17'11"L x 7'6"W x 7'4"H Average Maximum Payload Weight: 44,500Lbs If a High Stress is available, Average Max. Payload: 60,000Lbs	Dims in inches: 215"L x 90"W x 88"H Door Size: 90"W x 88"H Tare Weight: 6720Lbs	
20 foot FLAT RACK container: Average Interior dimensions: 18'7"L x 7'3"W x 7'4"H Average Maximum Payload Weight: 46,500Lbs If a High Stress is available, Average Max. Payload: 61 - 68,000Lb	Dims in inches: 223"L x 87"W x 88"H Tare Weight: 5500Lbs	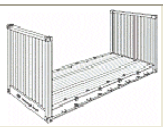
20 foot PLATFORM container: Average dimensions: 20'L x 8'W Average Maximum Payload Weight: 48,000Lbs If a High Stress with flush folding end walls is available, Average Max. Payload: 61 - 68,000Lbs	Dims in inches: 240"L x 96"W Tare Weight: 5560Lbs	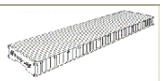
20 foot BULK container: Average Interior dimensions: 19'5"L x 7'8"W x 7'7"H Average Maximum Payload Weight: 47,000Lbs	Dims in inches: 233"L x 92"W x 91"H Door Size: 92"W x 90"H Tare Weight: 5400Lbs	
20 foot TANK container: Separate fleets for food, or chemical. Tanks must not be filled to less than 80% capacity to avoid surge/swell during transport		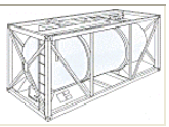

40 foot STANDARD container: Average Interior dimensions: 39'5"L x 7'8"W x 7'10"H Average Maximum Payload Weight: 58,000Lbs	Dims in inches: 473"L x 92"W x 94"H Door Size: 92"W x 90"H Tare Weight: 8330Lbs	

40 foot HIGH CUBE container: Average Interior dimensions: 39'5"L x 7'8"W x 8'10"H Average Maximum Payload Weight: 58,000Lbs	Dims in inches: 473"L x 92"W x 106"H Door Size: 92"W x 101"H Tare Weight: 8860Lbs
40 foot HARD TOP container: Average Interior dimensions: 39'5"L x 7'8"W x 7'6"H Average Maximum Payload Weight: 56,500Lbs	Dims in inches: 473"L x 92"W x 90"H Door Size: 86"W x 89"H Roof Opening: 461"L x 86"W Tare Weight: 10,360Lbs
40 foot HIGH CUBE HARD TOP container: Average Interior dimensions: 39'5"L x 7'8"W x 8'7"H Average Maximum Payload Weight: 56,500Lbs	Dims in inches: 473"L x 92"W x 103"H Door Size: 86"W x 102"H Roof Opening: 461"L x 86"W Tare Weight: 10,803Lbs
40 foot OPEN TOP container: Average Interior dimensions: 39'4"L x 7'7"W x 7'7"H Average Maximum Payload Weight: 57,500Lbs	Dims in inches: 473"L x 92"W x 91"H Door Size: 87"W x 89"H Roof Opening: 450"L x 87"W Tare Weight: 8,400Lbs
40 foot FLAT RACK container Average Interior dimensions: 38'4"L x 7'1"W x 6'5"H Average Maximum Payload Weight: 57,500Lbs If a High Stress is available, Average Max. Payload: 86,000Lbs	Dims in inches: 460"L x 85"W x 77"H Tare Weight: 9265Lbs (Fixed end walls) Tare Weight: 12,800Lbs (Folding) 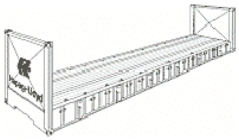
40 foot HIGH CUBE FLAT RACK container: Average Interior dimensions: 38'3"L x 7'2"W x 7'4"H Average Maximum Payload Weight: 86,500Lbs	Dims in inches: 460"L x 85"W x 88"H (Folding end walls) Tare Weight: 12,570Lbs 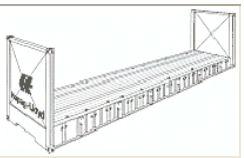
40 foot REEFER container: Average Interior dim: 36'8"L x 7'6"W x 7'5"H (max stowage 6'11"H) Average Maximum Payload Weight: 55,500Lbs If a High Stress is available, Average Max. Payload: 64,500Lbs	Dims in inches: 464"L x 90"W x 89"H Max stowage: 83"H (for ventilation) Door Size: 90"W x 86"H Tare Weight: 11,460Lbs
40 foot HIGH CUBE REEFER container: Average Interior dim: 37'11"L x 7'6"W x 8'2"H (max stowage 7'9"H) Average Maximum Payload Weight: 56,500Lbs If a High Stress is available, Average Max. Payload: 62,000Lbs	Dims in inches: 455"L x 90"W x 98"H Max stowage: 93"H (for ventilation) Door Size: 90"W x 100"H Tare Weight: 9,220Lbs 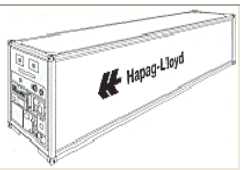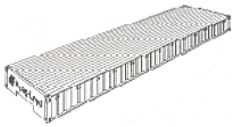
40 foot PLATFORM container: Average dimensions: 40'L x 7'4"W Average Maximum Payload Weight: 86,000Lbs	Dims in inches: 480"L x 96"W Tare Weight: 12,800Lbs